# Three phase input line reactors for VFD

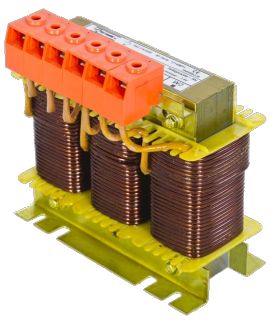

Three phase line reactors especially designed for power converters such as frequency converters, variable speed drives for DC motors, UPS systems, rectifiers, soft-starters and other types of non-linear loads.

It reduces current harmonics generated by the loads and the crest factor of the current wave. Attenuates micro cuts in the supply voltage generated by power converters.

Reduces energy consumption and improves power factor. Extends the service life of the equipment, avoids breakdowns and improves reliability.

Vacuum impregnation with epoxy varnish high binding power with special properties that protect windings and magnetic core from dust and humidity.

Connection with screw terminal blocks (rating up to 20 A). Connection with screws for flat terminals (rating from 25 to 100 A). Connection with flat busbars (rating over 125 A).

**Technical characteristics**

| | |
|---|---|
| Motor rating | 0,75 ÷ 630 kW<br>(1 ÷ 855 CV) |
| Nominal current | 2 ÷ 1200 A |
| Nominal voltage | 380 ÷ 500 V |
| Inductive impedance | 3,5 % @ 400 V, 50 Hz |
| Frequency | 50/60 Hz |
| Distortion 75÷100% load<br>Distortion 50÷75% load<br>Distortion < 50% load | ≈ 35% THD-I<br>≈ 45% THD-I<br>≈ 60% THD-I |
| Admissible overload | Permanent 1,07 $I_N$<br>Transitory 1,5 $I_N$ |
| Insulation class | F (155 ºC) |
| Ambient temperature | 50 ºC |
| Protection degree | IP-00 |
| Test voltage | 4 kV |
| Safety class | Class I |
| Standard | IEC/UNE-EN 60076-6 |

**Electrical diagram**

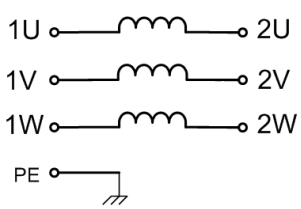

NET

ILT

CONVERTER (VFD)

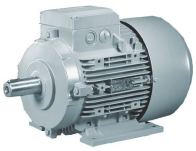

MOTOR

Comparative waveform of voltage-current at input of frequency converter

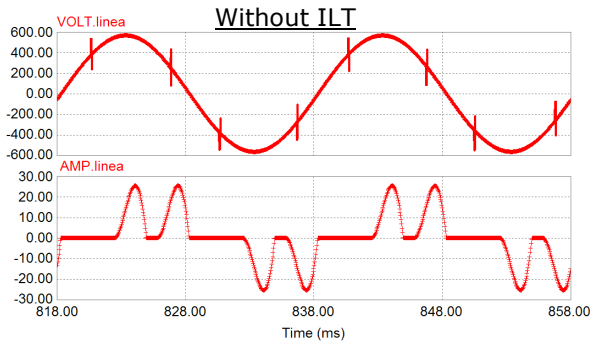


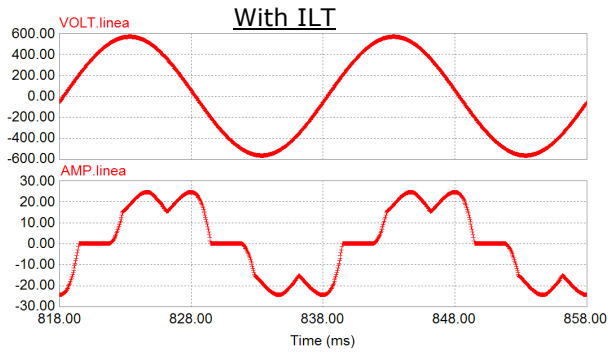


Select reactor according to motor rating

| Motor rating | | Rated current | Inductance | Losses | Reference | Dimensions mm | | | | | | Weight | Type |
|---|---|---|---|---|---|---|---|---|---|---|---|---|---|
| **kW** | **CV** | **A** | **mH** | **W** | | A | B | C | D | E | Ø | **kg** | |
| 0,75 | 1 | 2 | 12,812 | 20 | ILT002 | 120 | 75 | 125 | 94 | 47 | 6,5 | 1,1 | I |
| 1,5 | 2 | 4 | 6,406 | 30 | ILT004 | 120 | 75 | 125 | 94 | 47 | 6,5 | 1,2 | I |
| 2,2 | 3 | 6 | 4,271 | 40 | ILT006 | 120 | 84 | 125 | 94 | 57 | 6,5 | 1,7 | I |
| 3 | 4 | 8 | 3,203 | 45 | ILT008 | 120 | 84 | 125 | 94 | 57 | 6,5 | 1,8 | I |
| 4 | 5,5 | 10 | 2,562 | 50 | ILT010 | 150 | 72 | 149 | 100 | 47 | 7 | 2,3 | I |
| 5,5 | 7,5 | 15 | 1,708 | 70 | ILT015 | 150 | 98 | 149 | 100 | 62 | 7 | 3,7 | I |
| 7,5 | 10 | 20 | 1,281 | 75 | ILT020 | 150 | 98 | 149 | 100 | 62 | 7 | 3,9 | I |
| 11 | 15 | 25 | 1,025 | 85 | ILT025 | 180 | 108 | 205 | 140 | 72 | 7 | 5,4 | II |
| 15 | 20 | 30 | 0,854 | 95 | ILT030 | 180 | 113 | 205 | 140 | 77 | 7 | 6,2 | II |
| 18,5 | 25 | 40 | 0,641 | 120 | ILT040 | 180 | 123 | 205 | 140 | 87 | 7 | 7,6 | II |
| 22 | 30 | 50 | 0,512 | 140 | ILT050 | 240 | 131 | 210 | 200 | 90 | 7 | 9,6 | II |
| 30 | 40 | 60 | 0,427 | 150 | ILT060 | 240 | 131 | 210 | 200 | 90 | 7 | 10,1 | II |
| 37 | 50 | 80 | 0,320 | 180 | ILT080 | 240 | 151 | 210 | 200 | 110 | 7 | 14,7 | II |
| 45 | 60 | 100 | 0,256 | 200 | ILT100 | 240 | 166 | 210 | 200 | 125 | 7 | 18,4 | II |
| 55 | 75 | 125 | 0,205 | 230 | ILT125 | 300 | 160 | 252 | 200 | 100 | 11 | 21,1 | III |
| 75 | 100 | 150 | 0,171 | 310 | ILT150 | 300 | 175 | 252 | 200 | 100 | 11 | 28 | III |
| 90 | 125 | 200 | 0,128 | 390 | ILT200 | 300 | 166 | 302 | 200 | 110 | 11 | 28,8 | III |
| 110 | 150 | 250 | 0,102 | 480 | ILT250 | 300 | 183 | 302 | 200 | 120 | 11 | 34,4 | III |
| 150 | 200 | 300 | 0,085 | 530 | ILT300 | 300 | 193 | 302 | 200 | 130 | 11 | 39,3 | III |
| 185 | 250 | 400 | 0,064 | 730 | ILT400 | 360 | 210 | 363 | 320 | 130 | 11 | 52,4 | III |
| 220 | 300 | 500 | 0,051 | 800 | ILT500 | 360 | 210 | 363 | 320 | 130 | 11 | 55,7 | III |
| 300 | 410 | 600 | 0,043 | 850 | ILT600 | 360 | 240 | 363 | 320 | 160 | 11 | 73,7 | III |
| 400 | 545 | 800 | 0,032 | 1060 | ILT800 | 420 | 265 | 470 | 280 | 165 | 11 | 87,0 | III |
| 500 | 680 | 1000 | 0,026 | 1280 | ILT1000 | 420 | 275 | 542 | 280 | 165 | 11 | 110,0 | III |
| 630 | 855 | 1200 | 0,022 | 1360 | ILT1200 | 420 | 300 | 542 | 280 | 190 | 11 | 125,7 | III |

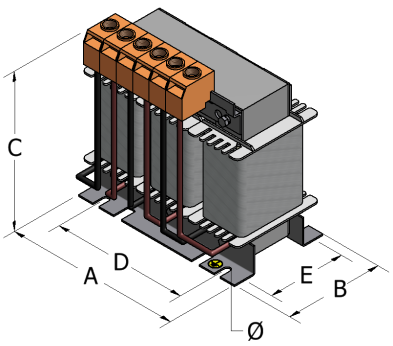

Type I

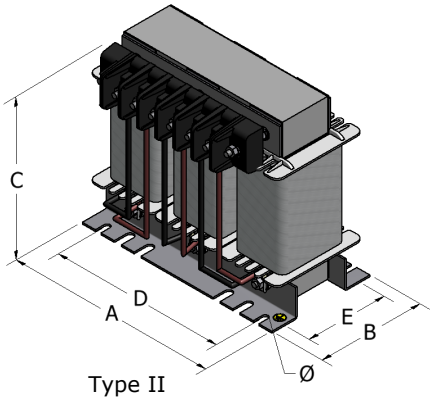

Type II

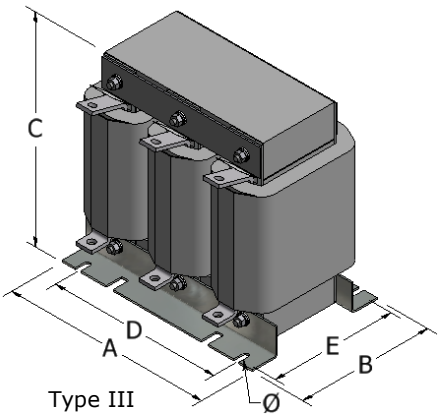

Type III

* All values show maximum dimensions.
* Other features, power, voltage, etc., on request.
* Torytrans reserves the right to modify the information in any time and without prior notice.